RallyAIRPro200S () | Produkt Nei 9120001126 | Dometic Parts Web

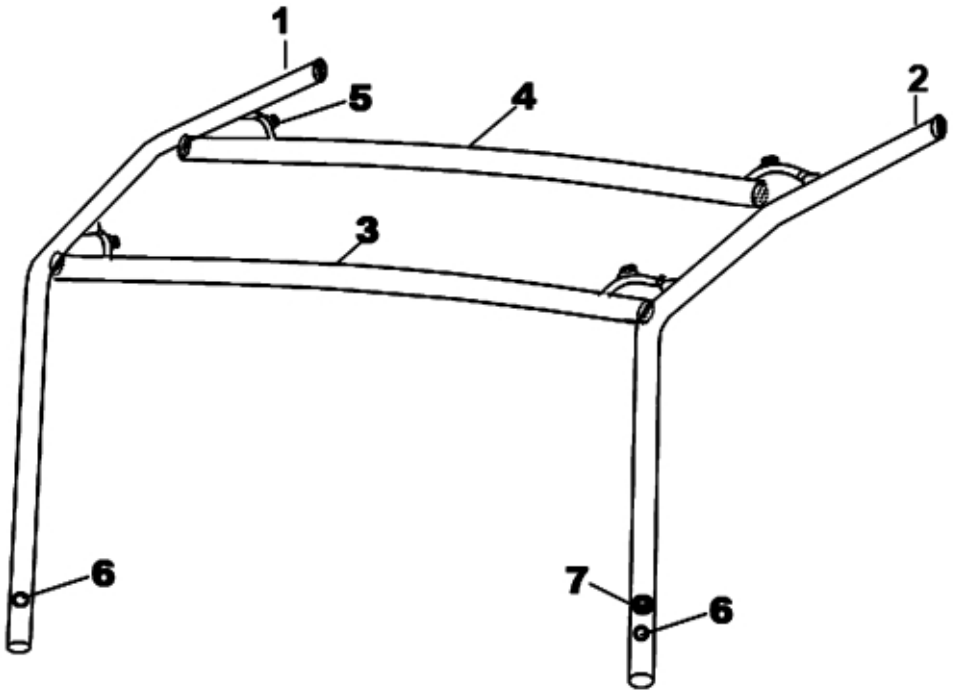

(Rally Air Pro 200S_00)

© 2021 Dometic Group AB (publ)

RallyAIRPro200S () | Produkt Nei 9120001126 | Dometic Parts Web

Part assemblies Tubes

PartNo	Pos	Qty	Description	Specification
4456001365	1		bladder	
4456001366	1		sleeve for bladder	
4456001367	2		bladder	
4456001368	2		sleeve for bladder	
4456001369	3		bladder	
4456001370	3		sleeve for bladder	
4456001371	4		bladder	
4456001372	4		sleeve for bladder	
4456000407	5		isolation valve	
4456001234	6		Deflation valve	
4456000408	7		Inflation valve	
4456001430	-		frontpanel	
4456000558	-		sidepanel	
4456001732	-		sidepanel	
4456001075	-		curtain	

© 2021 Dometic Group AB (publ)